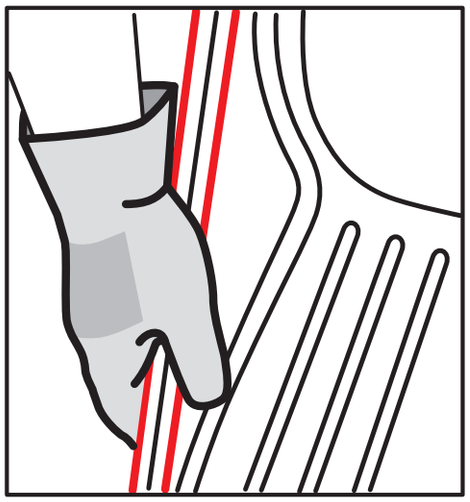

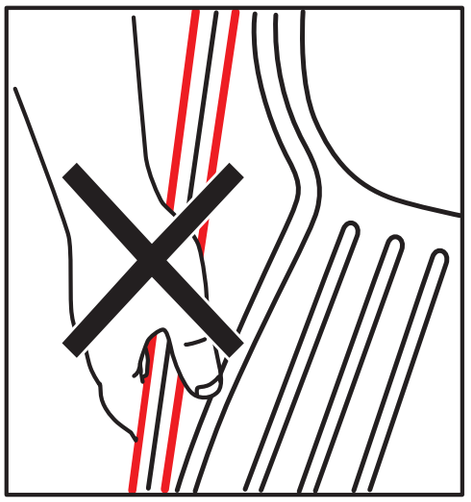

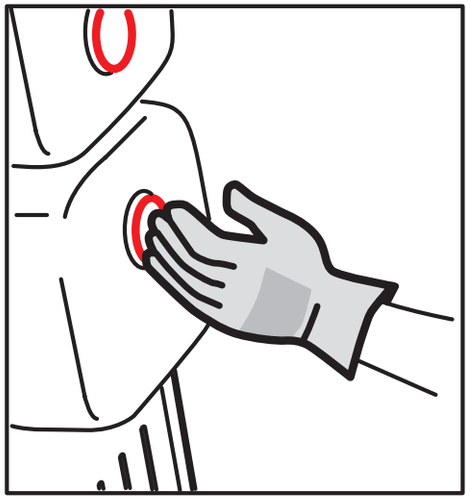

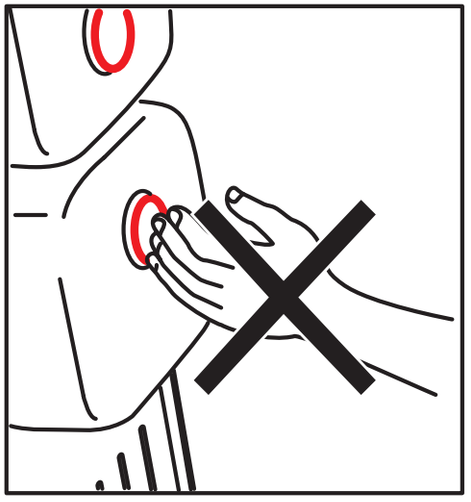

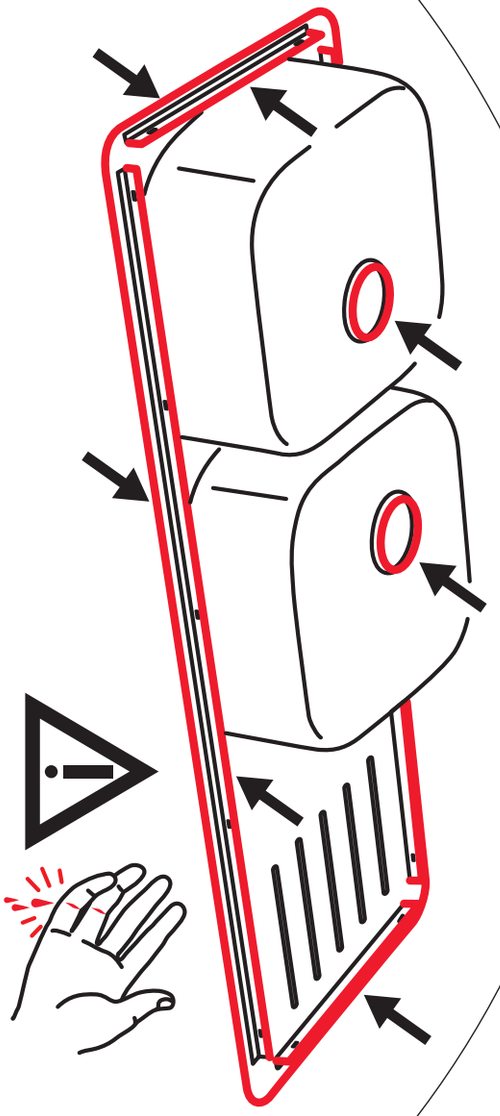

© Inter IKEA Systems B.V. 2015

AA-1870639-1